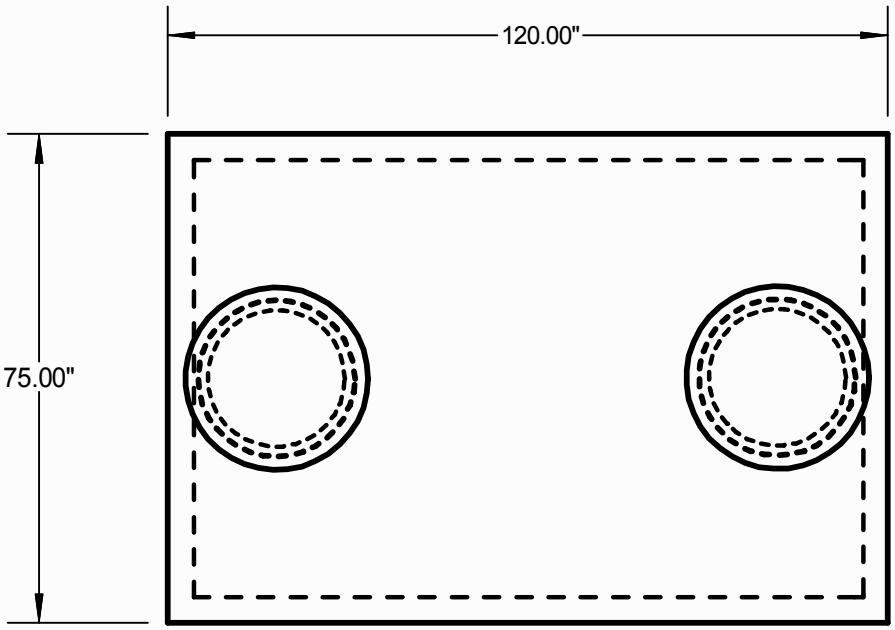

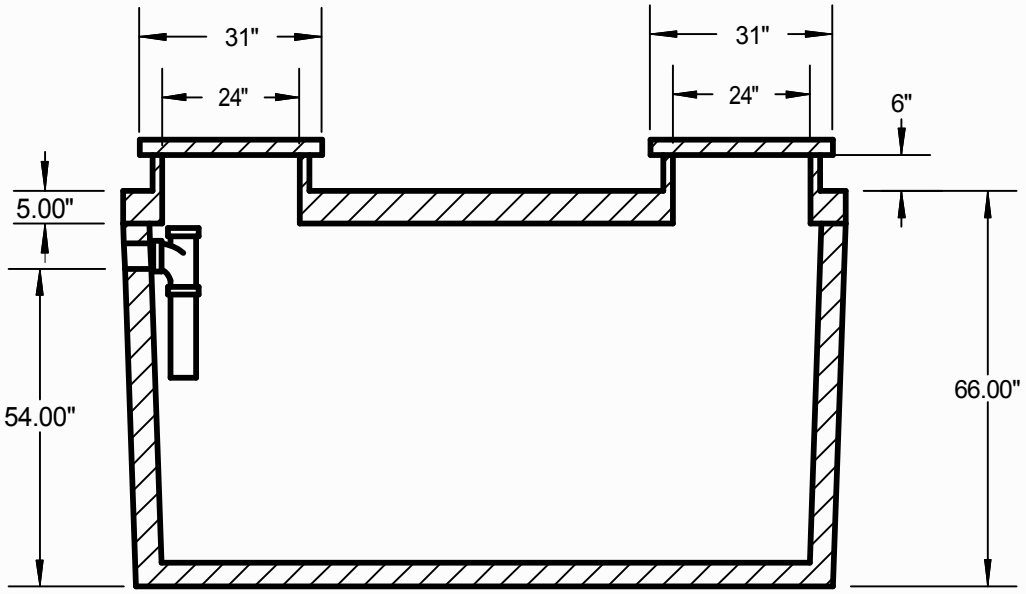

1500 GALLON- HOLDING TANK

EXCAVATION DIMENSIONS

(040108 WCP) 1541 1500 HT 2

GALLON CAPACITY	WIDTH OF HOLE	LENGTH OF HOLE	HEIGHT OF TANK	INLET TO BOTTOM*	TANK WEIGHT
1500	7'	11'	66"	54"	14,500#

*MEASUREMENT FROM THE BOTTOM OF THE TANK TO BOTTOM OF INLET HOLE.

TANK INCLUDES: TWO- 6" RISERS TWO-31" DIAMETER X 2 1/2" THICK LIDS
4" ABS INLET COUPLER

24526 S. HWY 99E • PO BOX 306 • CANBY, OR 97013 • TEL: 503 266 2670 • FAX: 503 266 7466