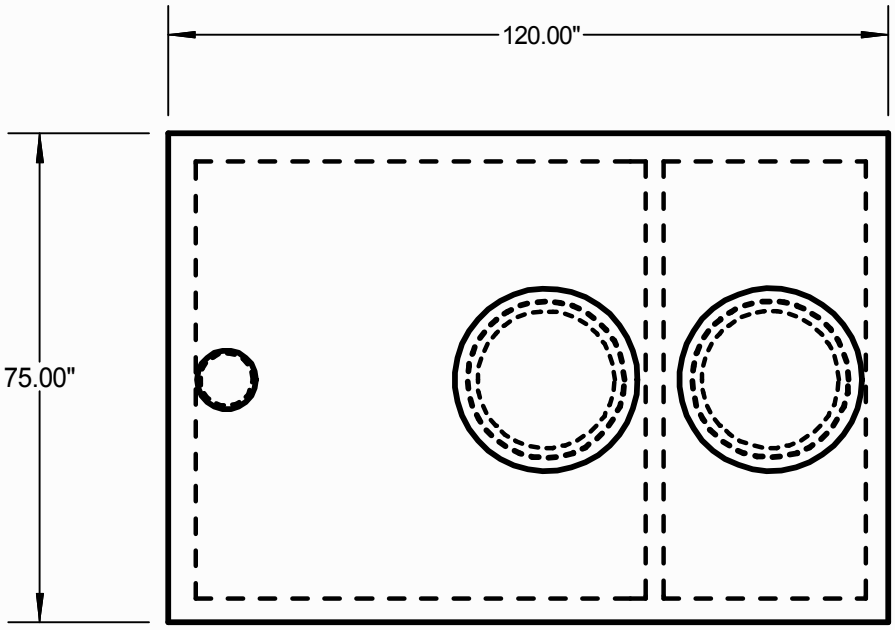

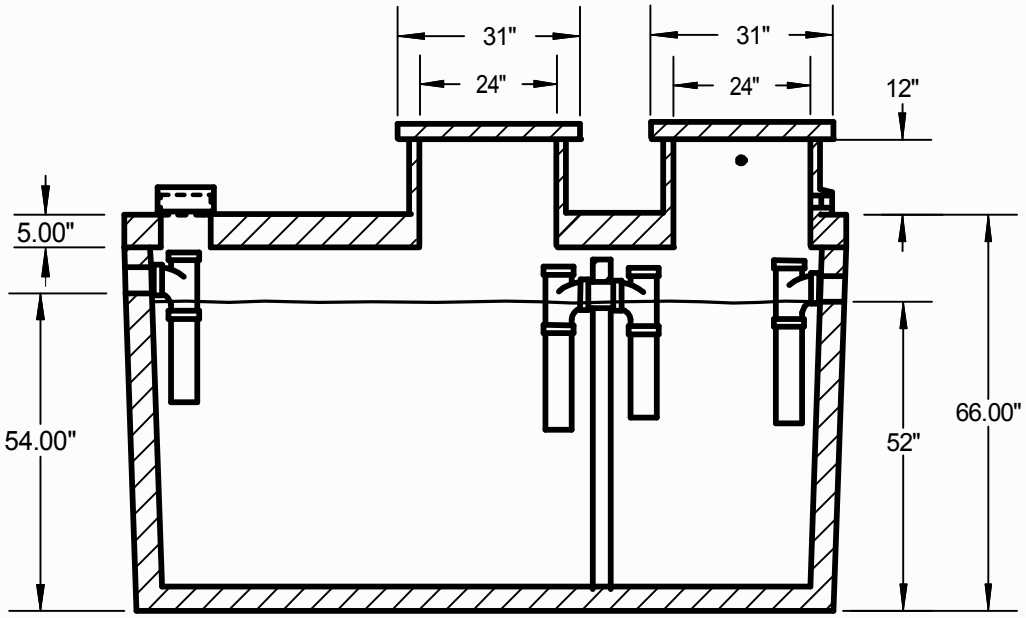

1500 GALLON- TWO COMPARTMENT - SEPTIC OR DOSING TANK

EXCAVATION DIMENSIONS

(123108 WCP) 1521 1500 3-HOLE DT

GALLON CAPACITY	WIDTH OF HOLE	LENGTH OF HOLE	HEIGHT OF TANK	INLET TO BOTTOM*	OUTLET TO BOTTOM*	TANK WEIGHT
1500	7'	11'	66"	54"	52"	14,500#

*MEASUREMENT FROM THE BOTTOM OF THE TANK TO BOTTOM OF INLET HOLE.

TANK INCLUDES:
- 2 - 12" RISERS
- 4" ABS INLET/OUTLET COUPLER
- 2" PVC DISCHARGE COUPLER
- 2-31" DIAMETER X 2 1/2" THICK LIDS
- 8" DIA. CLEAN OUT PORT
- 3/4" PVC ELECTRICAL COUPLER

24526 S. HWY 99E • PO BOX 306 • CANBY, OR 97013 • TEL: 503 266 2670 • FAX: 503 266 7466